4ST(M)

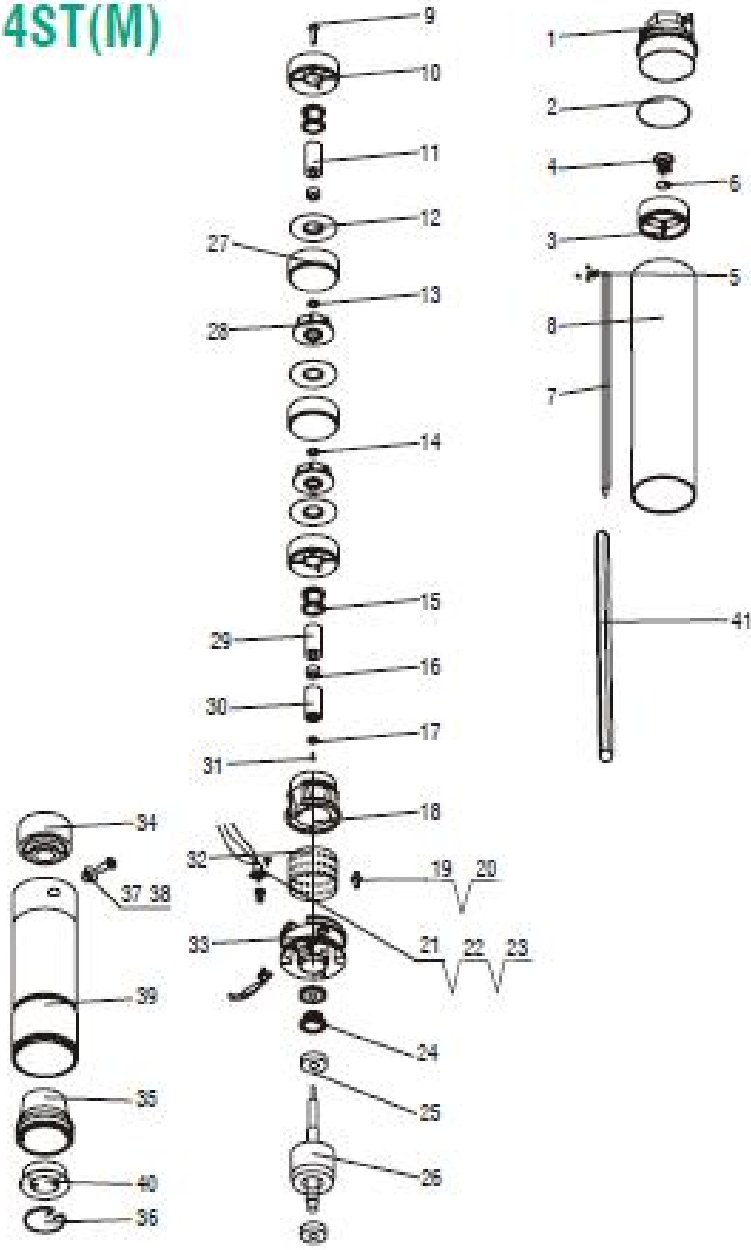

1.outlet	13/14.rubber washer	30.spline connector
2.o-ring	15.rubber shield	31.cross screw
3.valve	16.spring washer	32.filter
4.valve cover	17.seal	33.upper bearing seat
5.o-ring	18.joint	34.lower bearing seat
6.crimp terminal	19/20.screw,nut	35.membrane
7.wire clamp	21/22/23.plug	36.clamp spring
8.pump body	24.mechanical seal	37.screw cover
9.lock screw	25.ball bearing	38.cross screw
10.spacer bush	26.rotor	39.motor
11/29.bushing	27.volute	40.gland cover
12.cover	28.impeller	41.shaft